Product Name: XML 4

ILLUMINATION MACHINES

1200 Florence-Columbus Rd
Suite 113
Bordentown, NJ 08505
phone: 609-770-4608
illuminationmachines.com

XML-4 quad faceted reflector: High quality aluminum with ultra-bright specular finish faceted to mix light and enhance uniformity

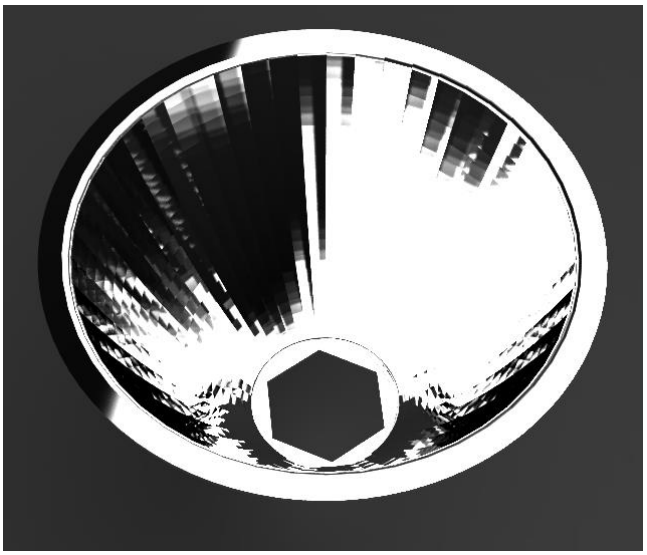

field illuminance plot at 1M distance
(.5m x .5m detector)

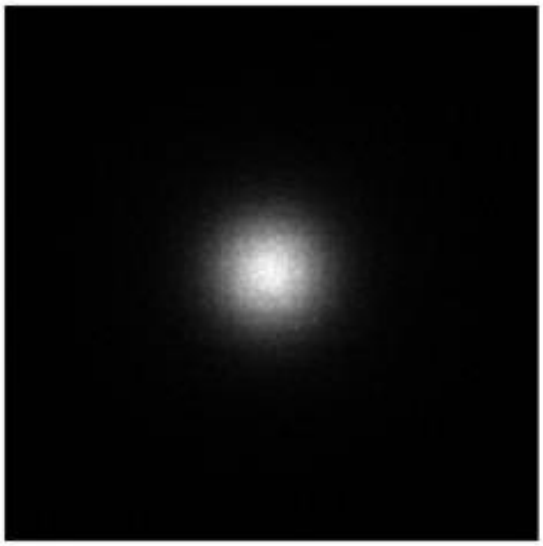

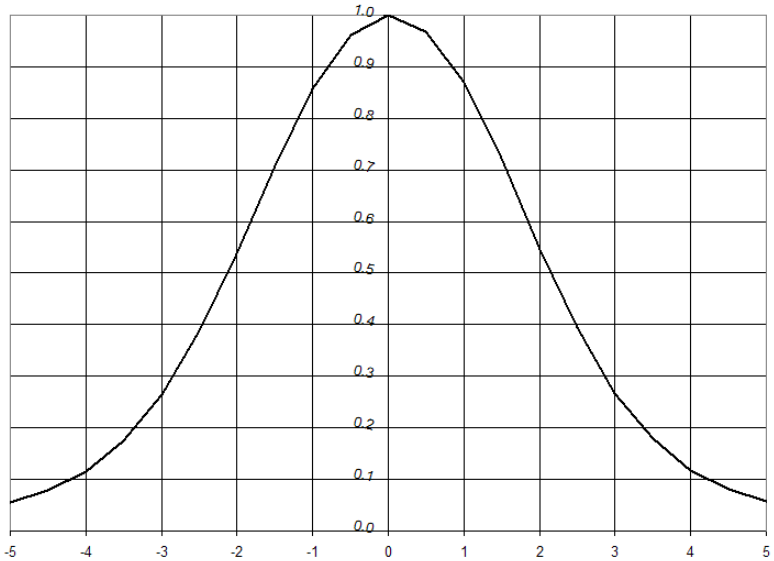

4.5deg beam
8.5deg field
55 cd/lm

Product Name: XML 4
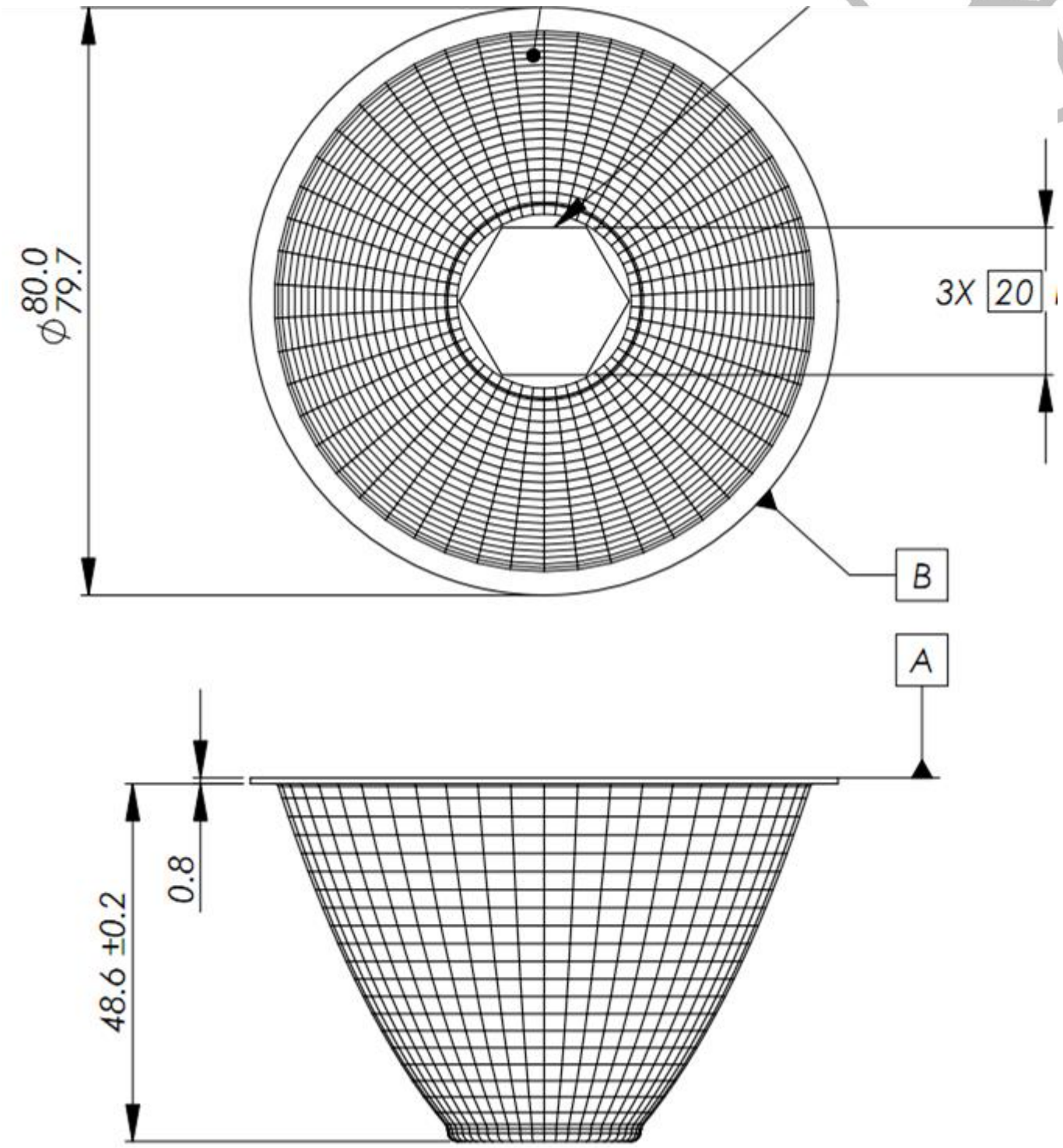
Mechanical Drawing